SOLVANG TECHNOLOY INC.

www.solvangtech.com
Email：sales@solvangtech.com

26.5GHZ SP6T 2.92MM 12VDC

NORMALLY OPEN TTL , 15PIN D CONNECTOR COAXIAL SWITCH

P/NO.STI12-0019

RoHS COMPLIANT

SPECIFICATION

Frequency	DC-26.5GHz
Isolation	DC-6GHz:70dB(Min.) 6-18GHz:60dB(Min.) 18-26.5GHz:50dB(Min.)
Insertion Loss	DC-6GHz:0.3dB(Max.) 6-12GHz:0.4dB(Max.) 12-18GHz:0.5dB(Max.) 18-26.5GHz:0.8dB(Max.)
VSWR	DC-6GHz:1.3:1(Max.) 6-12GHz:1.4:1(Max.) 12-18GHz:1.5:1(Max.) 18-26.5GHz:1.9:1(Max.)
Operating Voltage	DC12V/270mA
Life:	1,000,000 Cycles (Min.)
Switching Time	15ms (Max.)
Relative Humidity	5~85%
Vibration Operating	10G RMS@20~2000Hz
Mechanical Shock(Non-operating)	50G,1/2 Sine, 11 msec
Actuation	Normally Open
RF Connection	2.92mm Female
Impedance	50Ohm
Operating Temp.	-25~+ 65℃

MATERIAL LIST

Part	Material Plated
Connector	Stainless Steel

OUTLINE DRAWING

SP3T~SP6T

H:72(max.)

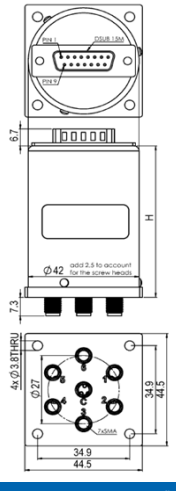

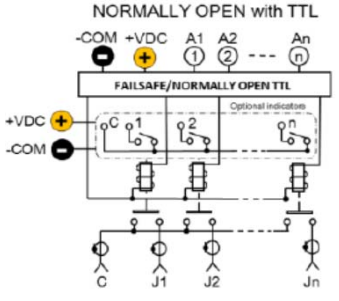

Logic Truth Table

RF PATH	A(n)	+VDC	COM
J(n)-C	1	Rated +V	GND
J(n)-T or Open	0	Rated +V	GND

NOTE: (1) TTL logic input A(n): low "0" = 0.0V – 0.8V; high "1" = 2.4V – 5.5V.
(2) +VDC=Rated voltage.

Unit:mm(Tolerance:±0.5mm)

NORMALLY OPEN TTL 15-PIN D-SUB PINOUT	
Pin No.	PINOUT
n=1-6	An (Jn-COM)
7	COM(-)
8	1 (IND: J1-C)
9	2 (IND: J2-C)
10	3 (IND: J3-C)
11	4 (IND: J4-C)
12	5 (IND: J5-C)
13	6 (IND: J6-C)
14	COM_I
15	+VDC

PIN 8-14: For optional INDICAOTRS only.

1PnT PORT CONFIGURATIONS						
1PnT	Ports Used					
1P6T	1	2	3	4	5	6
1P5T	1	2	3	4	5	
1P4T	1	2		4	5	
1P3T	1		3		5	

Note: "Blank" represents the unused RF and corresponding control ports.

TESTING DATA (100% S-PARAMETER TESTED)

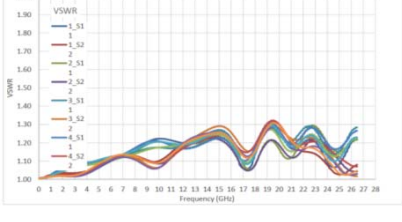

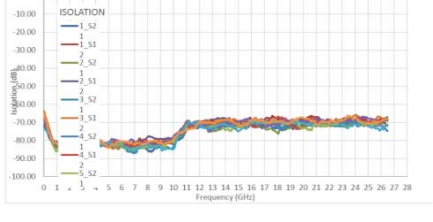

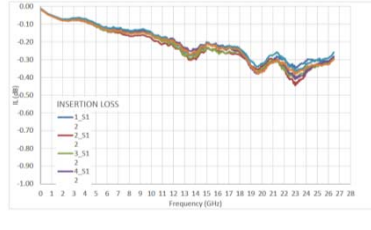

Any more request, please contact sales@solvangtech.com. Thank you ~